Location Entry Codes

As part of CIE's continual commitment to maintaining best practice in assessment, CIE uses different variants of some question papers for our most popular assessments with large and widespread candidature. The question papers are closely related and the relationships between them have been thoroughly established using our assessment expertise. All versions of the paper give assessment of equal standard.

The content assessed by the examination papers and the type of questions is unchanged.

This change means that for this component there are now two variant Question Papers, Mark Schemes and Principal Examiner's Reports where previously there was only one. For any individual country, it is intended that only one variant is used. This document contains both variants which will give all Centres access to even more past examination material than is usually the case.

The diagram shows the relationship between the Question Papers, Mark Schemes and Principal Examiners' Reports that are available.

Question Paper	**Mark Scheme**	**Principal Examiner's Report**
Introduction	Introduction	Introduction
First variant Question Paper	First variant Mark Scheme	First variant Principal Examiner's Report
Second variant Question Paper	Second variant Mark Scheme	Second variant Principal Examiner's Report

Who can I contact for further information on these changes?
Please direct any questions about this to CIE's Customer Services team at:
international@cie.org.uk

The titles for the variant items should correspond with the table above, so that at the top of the first page of the relevant part of the document and on the header, it has the words:

- First variant Question Paper / Mark Scheme / Principal Examiner's Report

or

- Second variant Question Paper / Mark Scheme / Principal Examiner's Report

as appropriate.

First Variant Question Paper

UNIVERSITY OF CAMBRIDGE INTERNATIONAL EXAMINATIONS
General Certificate of Education
Advanced Subsidiary Level and Advanced Level

CANDIDATE NAME

CENTRE NUMBER

CANDIDATE NUMBER

3132047580

PHYSICS **9702/21**

Paper 2 AS Structured Questions **May/June 2009**

1 hour

Candidates answer on the Question Paper.

No Additional Materials are required.

READ THESE INSTRUCTIONS FIRST

Write your Centre number, candidate number and name on all the work you hand in.
Write in dark blue or black pen.
You may use a soft pencil for any diagrams, graphs or rough working.
Do not use staples, paper clips, highlighters, glue or correction fluid.
DO **NOT** WRITE IN ANY BARCODES.

Answer **all** questions.
You may lose marks if you do not show your working or if you do not use appropriate units.

At the end of the examination, fasten all your work securely together.
The number of marks is given in brackets [ ] at the end of each question or part question.

For Examiner's Use	
1	
2	
3	
4	
5	
6	
7	
8	
Total	

This document consists of **16** printed pages.

© UCLES 2009

Data

speed of light in free space,	$c = 3.00 \times 10^{8}\ \text{m s}^{-1}$
permeability of free space,	$\mu_0 = 4\pi \times 10^{-7}\ \text{H m}^{-1}$
permittivity of free space,	$\varepsilon_0 = 8.85 \times 10^{-12}\ \text{F m}^{-1}$
elementary charge,	$e = 1.60 \times 10^{-19}\ \text{C}$
the Planck constant,	$h = 6.63 \times 10^{-34}\ \text{J s}$
unified atomic mass constant,	$u = 1.66 \times 10^{-27}\ \text{kg}$
rest mass of electron,	$m_e = 9.11 \times 10^{-31}\ \text{kg}$
rest mass of proton,	$m_p = 1.67 \times 10^{-27}\ \text{kg}$
molar gas constant,	$R = 8.31\ \text{J K}^{-1}\ \text{mol}^{-1}$
the Avogadro constant,	$N_A = 6.02 \times 10^{23}\ \text{mol}^{-1}$
the Boltzmann constant,	$k = 1.38 \times 10^{-23}\ \text{J K}^{-1}$
gravitational constant,	$G = 6.67 \times 10^{-11}\ \text{N m}^2\ \text{kg}^{-2}$
acceleration of free fall,	$g = 9.81\ \text{m s}^{-2}$

© UCLES 2009

Formulae

uniformly accelerated motion, $s = ut + \frac{1}{2}at^2$
$v^2 = u^2 + 2as$

work done on/by a gas, $W = p\Delta V$

gravitational potential, $\phi = -\frac{Gm}{r}$

hydrostatic pressure, $p = \rho gh$

pressure of an ideal gas, $p = \frac{1}{3}\frac{Nm}{V}\langle c^2 \rangle$

simple harmonic motion, $a = -\omega^2 x$

velocity of particle in s.h.m., $v = v_0 \cos \omega t$
$v = \pm \omega \sqrt{(x_0^2 - x^2)}$

electric potential, $V = \frac{Q}{4\pi\varepsilon_0 r}$

capacitors in series, $1/C = 1/C_1 + 1/C_2 + \ldots$

capacitors in parallel, $C = C_1 + C_2 + \ldots$

energy of charged capacitor, $W = \frac{1}{2}QV$

resistors in series, $R = R_1 + R_2 + \ldots$

resistors in parallel, $1/R = 1/R_1 + 1/R_2 + \ldots$

alternating current/voltage, $x = x_0 \sin \omega t$

radioactive decay, $x = x_0 \exp(-\lambda t)$

decay constant, $\lambda = \frac{0.693}{t_{\frac{1}{2}}}$

© UCLES 2009

[Turn over

Answer **all** the questions in the spaces provided.

1 **(a)** State the most appropriate instrument, or instruments, for the measurement of the following.

(i) the diameter of a wire of diameter about 1 mm

..... [1]

(ii) the resistance of a filament lamp

..... [1]

(iii) the peak value of an alternating voltage

..... [1]

(b) The mass of a cube of aluminium is found to be 580 g with an uncertainty in the measurement of 10 g. Each side of the cube has a length of (6.0 ± 0.1) cm.

Calculate the density of aluminium with its uncertainty. Express your answer to an appropriate number of significant figures.

density = ... ± ..... $g\,cm^{-3}$ [5]

© UCLES 2009

2 A ball B of mass 1.2 kg travelling at constant velocity collides head-on with a stationary ball S of mass 3.6 kg, as shown in Fig. 2.1.

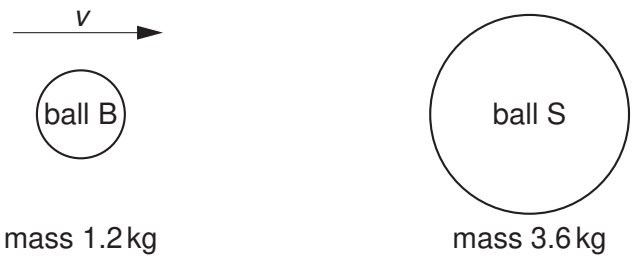

Fig. 2.1

Frictional forces are negligible.

The variation with time t of the velocity v of ball B before, during and after colliding with ball S is shown in Fig. 2.2.

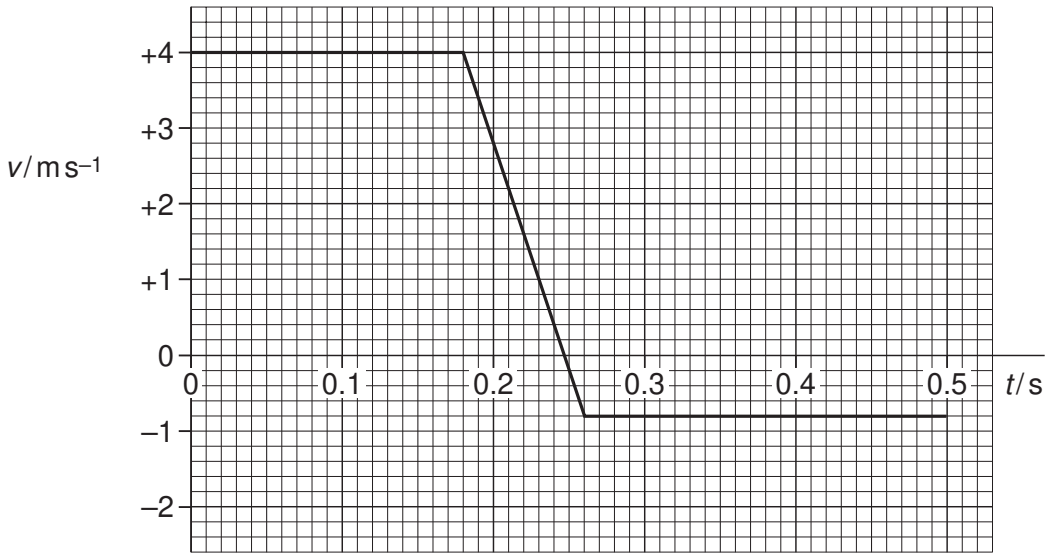

Fig. 2.2

(a) State the significance of positive and negative values for v in Fig. 2.2.

.....

..... [1]

(b) Use Fig. 2.2 to determine, for ball B during the collision with ball S,

(i) the change in momentum of ball B,

change in momentum = ... Ns [3]

(ii) the magnitude of the force acting on ball B.

force = ... N [3]

(c) Calculate the speed of ball S after the collision.

speed = ... ms^{-1} [2]

© UCLES 2009

(d) Using your answer in **(c)** and information from Fig. 2.2, deduce quantitatively whether the collision is elastic or inelastic.

.....

..... [2]

3 **(a)** Define the *torque* of a couple.

.....

.....

..... [2]

(b) A torque wrench is a type of spanner for tightening a nut and bolt to a particular torque, as illustrated in Fig. 3.1.

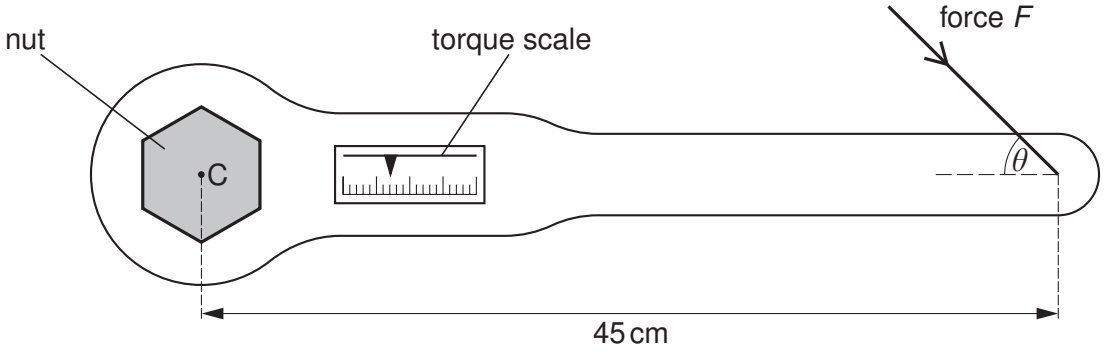

Fig. 3.1

The wrench is put on the nut and a force is applied to the handle. A scale indicates the torque applied.

The wheel nuts on a particular car must be tightened to a torque of 130 N m. This is achieved by applying a force F to the wrench at a distance of 45 cm from its centre of rotation C. This force F may be applied at any angle θ to the axis of the handle, as shown in Fig. 3.1.

For the minimum value of F to achieve this torque,

(i) state the magnitude of the angle θ that should be used,

θ = ... ° [1]

(ii) calculate the magnitude of F.

F = ... N [2]

© UCLES 2009

4 A spring having spring constant *k* hangs vertically from a fixed point. A load of weight *L*, when hung from the spring, causes an extension *e*. The elastic limit of the spring is not exceeded.

(a) State

(i) what is meant by an *elastic deformation*,

.....

.....

..... [2]

(ii) the relation between *k*, *L* and *e*.

..... [1]

Question 4 continues on page 10

(b) Some identical springs, each with spring constant *k*, are arranged as shown in Fig. 4.1.

arrangement	total extension	spring constant of arrangement
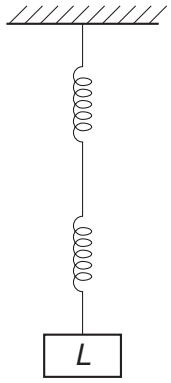	.....	.....
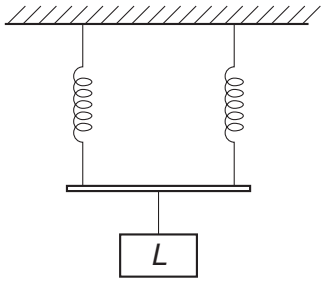	.....	.....
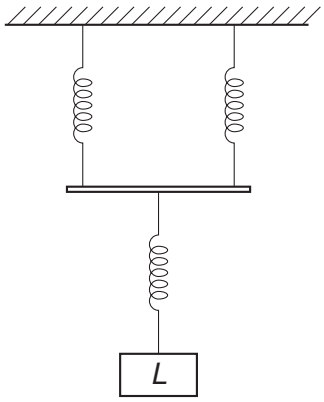	.....	.....

Fig. 4.1

The load on each of the arrangements is *L*.

For each arrangement in Fig. 4.1, complete the table by determining

(i) the total extension in terms of *e*,

(ii) the spring constant in terms of *k*.

[5]

© UCLES 2009

5 Two sources S_1 and S_2 of sound are situated 80 cm apart in air, as shown in Fig. 5.1.

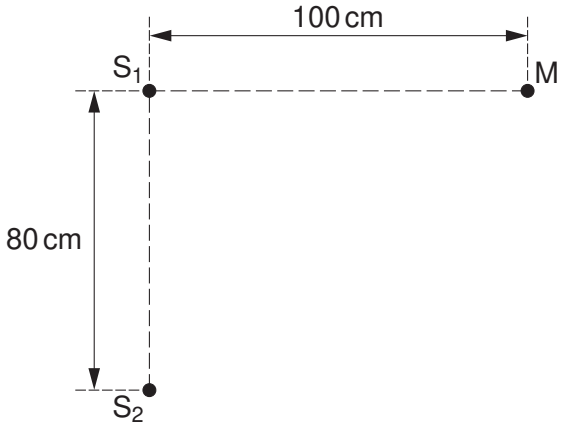

Fig. 5.1

The frequency of vibration can be varied. The two sources always vibrate in phase but have different amplitudes of vibration.

A microphone M is situated a distance 100 cm from S_1 along a line that is normal to S_1S_2.

As the frequency of S_1 and S_2 is gradually increased, the microphone M detects maxima and minima of intensity of sound.

(a) State the two conditions that must be satisfied for the intensity of sound at M to be zero.

1. .....

.....

2. .....

.....

[2]

(b) The speed of sound in air is 330 m s^{-1}.

The frequency of the sound from S_1 and S_2 is increased. Determine the number of minima that will be detected at M as the frequency is increased from 1.0 kHz to 4.0 kHz.

number = ... [4]

6 Two vertical parallel metal plates are situated 2.50 cm apart in a vacuum. The potential difference between the plates is 350 V, as shown in Fig. 6.1.

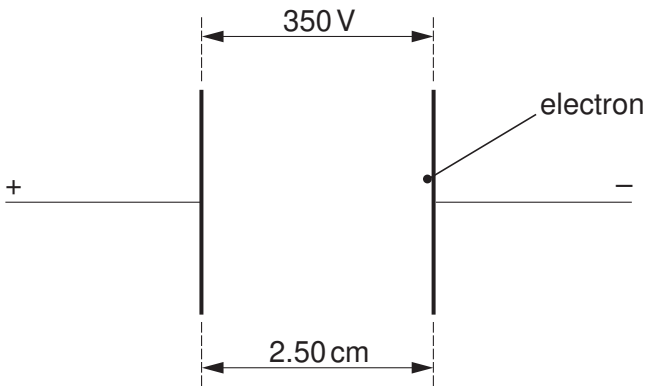

Fig. 6.1

An electron is initially at rest close to the negative plate and in the uniform electric field between the plates.

(a) (i) Calculate the magnitude of the electric field between the plates.

electric field strength = ... NC^{-1} [2]

(ii) Show that the force on the electron due to the electric field is 2.24×10^{-15} N.

[2]

© UCLES 2009

(b) The electron accelerates horizontally across the space between the plates. Determine

(i) the horizontal acceleration of the electron,

acceleration = ... $m\,s^{-2}$ [2]

(ii) the time to travel the horizontal distance of 2.50 cm between the plates.

time = ... s [2]

(c) Explain why gravitational effects on the electron need not be taken into consideration in your calculation in **(b)**.

.....

.....

..... [2]

7 A network of resistors, each of resistance R, is shown in Fig. 7.1.

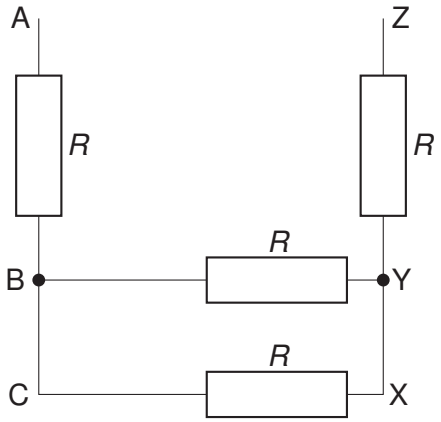

Fig. 7.1

(a) Calculate the total resistance, in terms of R, between points

(i) A and C,

resistance = ... [1]

(ii) B and X,

resistance = ... [1]

(iii) A and Z.

resistance = ... [1]

© UCLES 2009

(b) Two cells of e.m.f. E_1 and E_2 and negligible internal resistance are connected into the network in **(a)**, as shown in Fig. 7.2.

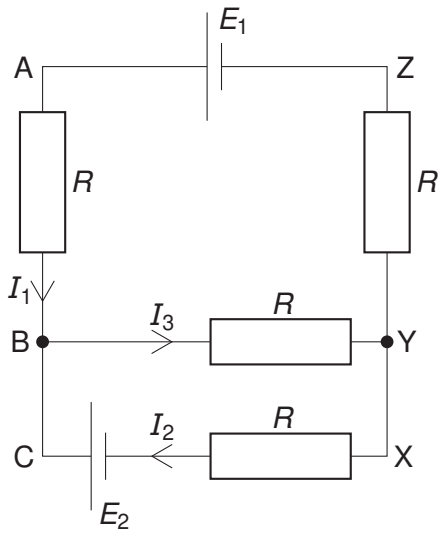

Fig. 7.2

The currents in the network are as indicated in Fig. 7.2.

Use Kirchhoff's laws to state the relation

(i) between currents I_1, I_2 and I_3,

..... [1]

(ii) between E_2, R, I_2 and I_3 in loop BCXYB,

..... [1]

(iii) between E_1, E_2, R, I_1 and I_2 in loop ABCXYZA.

..... [1]

© UCLES 2009

8 The spontaneous and random decay of a radioactive substance involves the emission of either α-radiation or β-radiation and/or γ-radiation.

(a) Explain what is meant by *spontaneous* decay.

.....

.....

..... [2]

(b) State the type of emission, one in each case, that

(i) is not affected by electric and magnetic fields,

..... [1]

(ii) produces the greatest density of ionisation in a medium,

..... [1]

(iii) does not directly result in a change in the proton number of the nucleus,

..... [1]

(iv) has a range of energies, rather than discrete values.

..... [1]

Permission to reproduce items where third-party owned material protected by copyright is included has been sought and cleared where possible. Every reasonable effort has been made by the publisher (UCLES) to trace copyright holders, but if any items requiring clearance have unwittingly been included, the publisher will be pleased to make amends at the earliest possible opportunity.

University of Cambridge International Examinations is part of the Cambridge Assessment Group. Cambridge Assessment is the brand name of University of Cambridge Local Examinations Syndicate (UCLES), which is itself a department of the University of Cambridge.

© UCLES 2009

Second Variant Question Paper

UNIVERSITY OF CAMBRIDGE INTERNATIONAL EXAMINATIONS
General Certificate of Education
Advanced Subsidiary Level and Advanced Level

CANDIDATE NAME

CENTRE NUMBER

CANDIDATE NUMBER

0821450793

PHYSICS **9702/22**

Paper 2 AS Structured Questions **May/June 2009**

1 hour

Candidates answer on the Question Paper.

No Additional Materials are required.

READ THESE INSTRUCTIONS FIRST

Write your Centre number, candidate number and name on all the work you hand in.
Write in dark blue or black pen.
You may use a soft pencil for any diagrams, graphs or rough working.
Do not use staples, paper clips, highlighters, glue or correction fluid.
DO **NOT** WRITE IN ANY BARCODES.

Answer **all** questions.
You may lose marks if you do not show your working or if you do not use appropriate units.

At the end of the examination, fasten all your work securely together.
The number of marks is given in brackets [ ] at the end of each question or part question.

For Examiner's Use	
1	
2	
3	
4	
5	
6	
7	
8	
Total	

This document consists of **15** printed pages and **1** blank page.

© UCLES 2009

Data

speed of light in free space,	$c = 3.00 \times 10^{8}\ \text{m s}^{-1}$
permeability of free space,	$\mu_0 = 4\pi \times 10^{-7}\ \text{H m}^{-1}$
permittivity of free space,	$\varepsilon_0 = 8.85 \times 10^{-12}\ \text{F m}^{-1}$
elementary charge,	$e = 1.60 \times 10^{-19}\ \text{C}$
the Planck constant,	$h = 6.63 \times 10^{-34}\ \text{J s}$
unified atomic mass constant,	$u = 1.66 \times 10^{-27}\ \text{kg}$
rest mass of electron,	$m_e = 9.11 \times 10^{-31}\ \text{kg}$
rest mass of proton,	$m_p = 1.67 \times 10^{-27}\ \text{kg}$
molar gas constant,	$R = 8.31\ \text{J K}^{-1}\ \text{mol}^{-1}$
the Avogadro constant,	$N_A = 6.02 \times 10^{23}\ \text{mol}^{-1}$
the Boltzmann constant,	$k = 1.38 \times 10^{-23}\ \text{J K}^{-1}$
gravitational constant,	$G = 6.67 \times 10^{-11}\ \text{N m}^2\ \text{kg}^{-2}$
acceleration of free fall,	$g = 9.81\ \text{m s}^{-2}$

© UCLES 2009

Formulae

uniformly accelerated motion, $s = ut + \frac{1}{2}at^2$
$v^2 = u^2 + 2as$

work done on/by a gas, $W = p\Delta V$

gravitational potential, $\phi = -\frac{Gm}{r}$

hydrostatic pressure, $p = \rho gh$

pressure of an ideal gas, $p = \frac{1}{3}\frac{Nm}{V}\langle c^2 \rangle$

simple harmonic motion, $a = -\omega^2 x$

velocity of particle in s.h.m., $v = v_0 \cos \omega t$
$v = \pm \omega\sqrt{(x_0^2 - x^2)}$

electric potential, $V = \frac{Q}{4\pi\varepsilon_0 r}$

capacitors in series, $1/C = 1/C_1 + 1/C_2 + \ldots$

capacitors in parallel, $C = C_1 + C_2 + \ldots$

energy of charged capacitor, $W = \frac{1}{2}QV$

resistors in series, $R = R_1 + R_2 + \ldots$

resistors in parallel, $1/R = 1/R_1 + 1/R_2 + \ldots$

alternating current/voltage, $x = x_0 \sin \omega t$

radioactive decay, $x = x_0 \exp(-\lambda t)$

decay constant, $\lambda = \frac{0.693}{t_{\frac{1}{2}}}$

© UCLES 2009

[Turn over

Answer **all** the questions in the spaces provided.

1 **(a)** Two of the SI base quantities and their units are mass (kg) and length (m).

Name three other SI base quantities and their units.

1. quantity ..... unit .....

2. quantity ..... unit .....

3. quantity ..... unit .....

[3]

(b) The pressure p due to a liquid of density ρ is related to the depth h by the expression

$$p = \rho g h,$$

where g is the acceleration of free fall.

Use this expression to determine the derived units of pressure. Explain your working.

[5]

© UCLES 2009

2 An experiment is conducted on the surface of the planet Mars.
A sphere of mass 0.78 kg is projected almost vertically upwards from the surface of the planet. The variation with time t of the vertical velocity v in the upward direction is shown in Fig. 2.1.

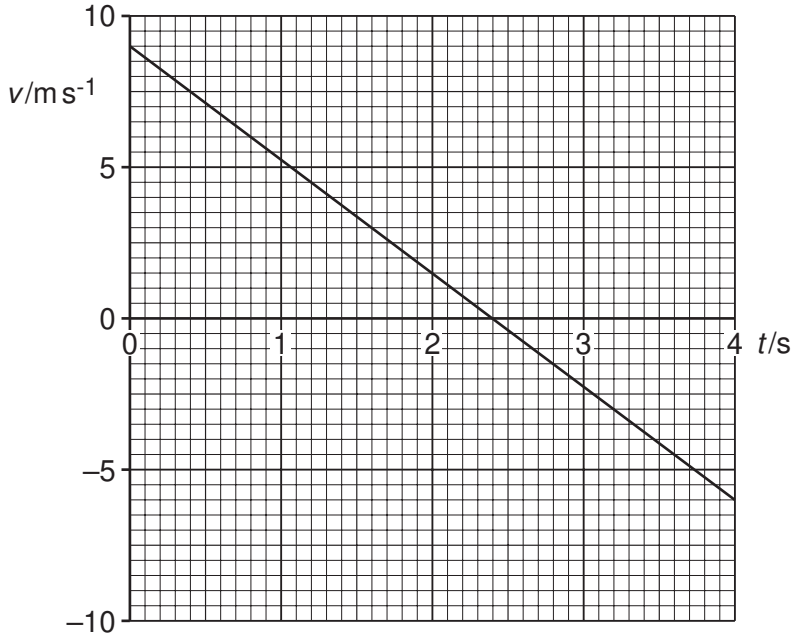

Fig. 2.1

The sphere lands on a small hill at time $t = 4.0$ s.

(a) State the time t at which the sphere reaches its maximum height above the planet's surface.

$t =$ ..... s [1]

(b) Determine the vertical height above the point of projection at which the sphere finally comes to rest on the hill.

height = ... m [3]

(c) Calculate, for the first 3.5 s of the motion of the sphere,

(i) the change in momentum of the sphere,

change in momentum = ...N s [2]

(ii) the force acting on the sphere.

force = ...N [2]

(d) Using your answer in **(c)(ii)**,

(i) state the weight of the sphere,

weight = ...N [1]

(ii) determine the acceleration of free fall on the surface of Mars.

acceleration = ... $m\,s^{-2}$ [2]

© UCLES 2009

3 **(a)** Define the *torque* of a couple.

.....

.....

..... [2]

(b) A torque wrench is a type of spanner for tightening a nut and bolt to a particular torque, as illustrated in Fig. 3.1.

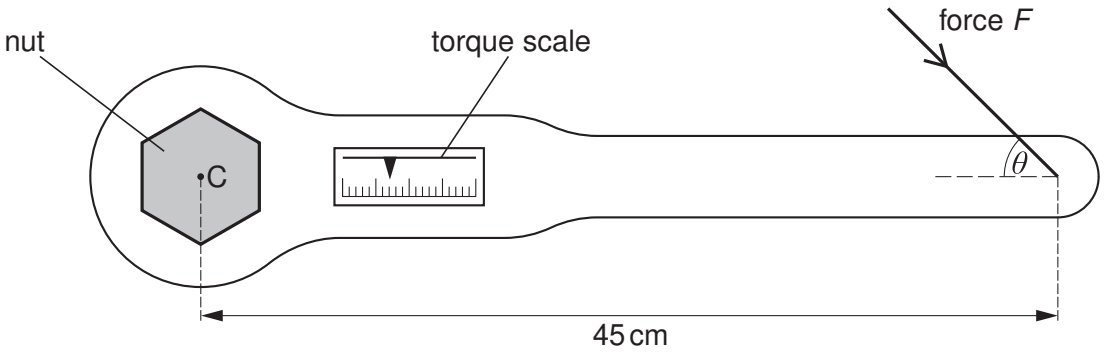

Fig. 3.1

The wrench is put on the nut and a force is applied to the handle. A scale indicates the torque applied.

The wheel nuts on a particular car must be tightened to a torque of 130 N m. This is achieved by applying a force F to the wrench at a distance of 45 cm from its centre of rotation C. This force F may be applied at any angle θ to the axis of the handle, as shown in Fig. 3.1.

For the minimum value of F to achieve this torque,

(i) state the magnitude of the angle θ that should be used,

θ = ... ° [1]

(ii) calculate the magnitude of F.

F = ... N [2]

4 A spring having spring constant k hangs vertically from a fixed point. A load of weight L, when hung from the spring, causes an extension e. The elastic limit of the spring is not exceeded.

(a) State

(i) what is meant by an *elastic deformation*,

.....

.....

..... [2]

(ii) the relation between k, L and e.

..... [1]

(b) Some identical springs, each with spring constant k, are arranged as shown in Fig. 4.1.

arrangement	total extension	spring constant of arrangement
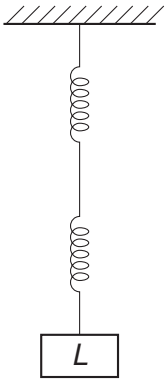	.....	.....
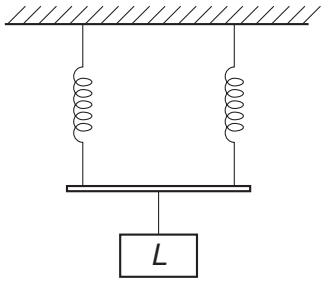	.....	.....
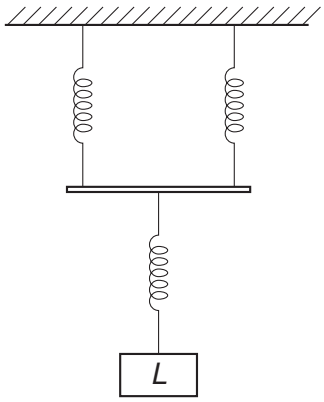	.....	.....

Fig. 4.1

The load on each of the arrangements is L.

For each arrangement in Fig. 4.1, complete the table by determining

(i) the total extension in terms of e,

(ii) the spring constant in terms of k.

[5]

5 A double-slit interference experiment is set up using coherent red light as illustrated in Fig. 5.1.

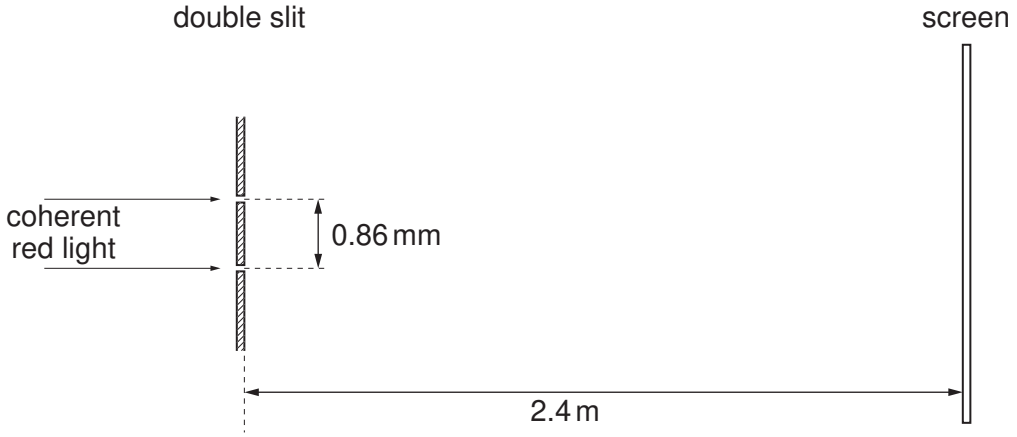

Fig. 5.1 (not to scale)

The separation of the slits is 0.86 mm.
The distance of the screen from the double slit is 2.4 m.
A series of light and dark fringes is observed on the screen.

(a) State what is meant by *coherent* light.

.....

..... [1]

(b) Estimate the separation of the dark fringes on the screen.

separation = ... mm [3]

(c) Initially, the light passing through each slit has the same intensity.
The intensity of light passing through one slit is now reduced.
Suggest and explain the effect, if any, on the dark fringes observed on the screen.

.....

.....

..... [2]

© UCLES 2009

6 Two vertical parallel metal plates are situated 2.50 cm apart in a vacuum. The potential difference between the plates is 350 V, as shown in Fig. 6.1.

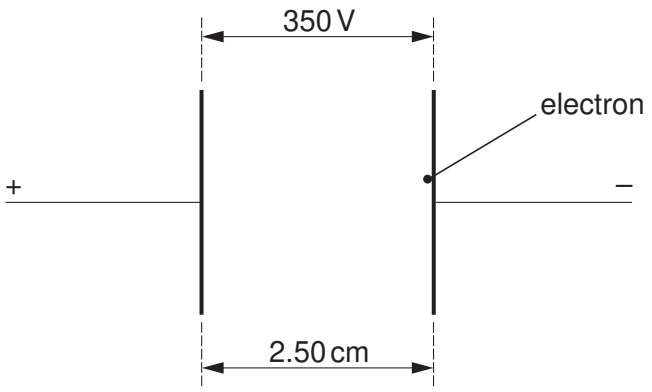

Fig. 6.1

An electron is initially at rest close to the negative plate and in the uniform electric field between the plates.

(a) (i) Calculate the magnitude of the electric field between the plates.

electric field strength = ... NC^{-1} [2]

(ii) Show that the force on the electron due to the electric field is 2.24×10^{-15} N.

[2]

© UCLES 2009

(b) The electron accelerates horizontally across the space between the plates. Determine

(i) the horizontal acceleration of the electron,

acceleration = ... $m\,s^{-2}$ [2]

(ii) the time to travel the horizontal distance of 2.50 cm between the plates.

time = ... s [2]

(c) Explain why gravitational effects on the electron need not be taken into consideration in your calculation in **(b)**.

.....

.....

..... [2]

7 **(a)** A network of resistors, each of resistance *R*, is shown in Fig. 7.1.

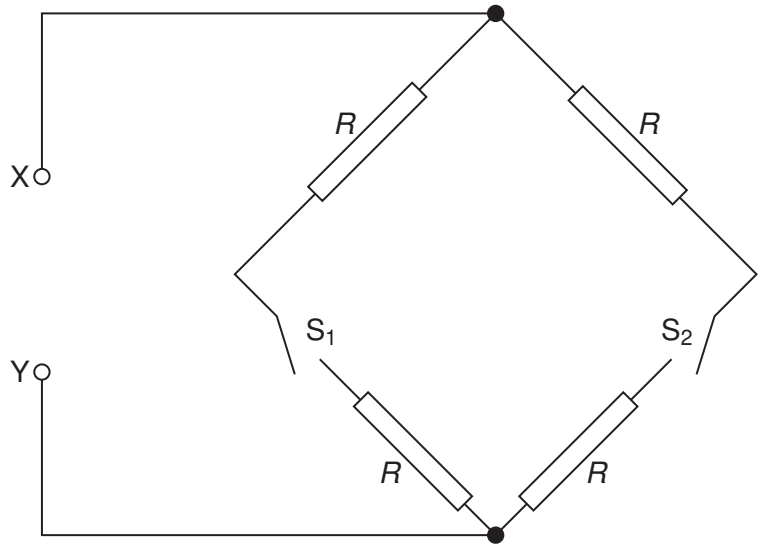

Fig. 7.1

Switches S_1 and S_2 may be 'open' or 'closed'.

Complete Fig. 7.2 by calculating the resistance, in terms of *R*, between points X and Y for the switches in the positions shown.

switch S_1	switch S_2	resistance between points X and Y
open	open	.....
open	closed	.....
closed	closed	.....

Fig. 7.2

[3]

© UCLES 2009

[Turn over

(b) Two cells of e.m.f. E_1 and E_2 and negligible internal resistance are connected into a network of resistors, as shown in Fig. 7.3.

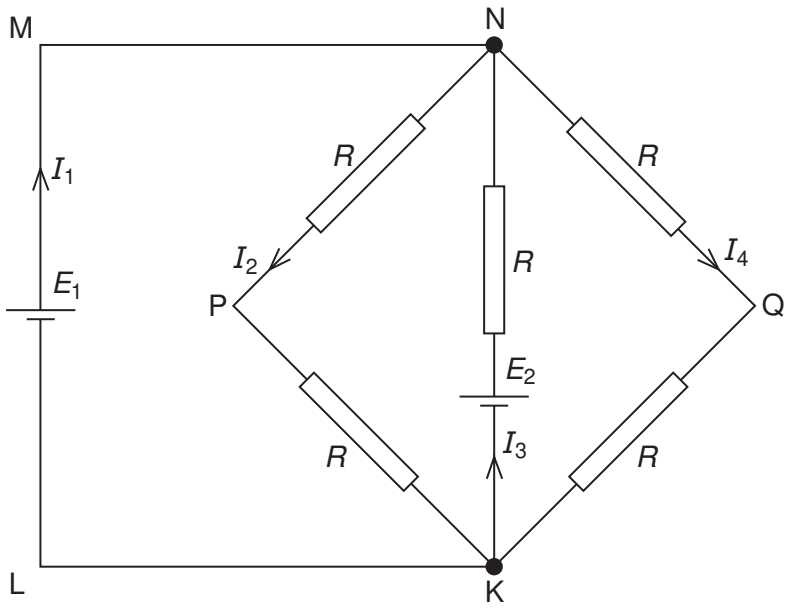

Fig. 7.3

The currents in the network are as indicated in Fig. 7.3.

Use Kirchhoff's laws to state the relation

(i) between currents I_1, I_2, I_3 and I_4,

.....[1]

(ii) between E_1, E_2, R, and I_3 in loop NKLMN,

.....[1]

(iii) between E_2, R, I_3 and I_4 in loop NKQN.

.....[1]

© UCLES 2009

8 The spontaneous and random decay of a radioactive substance involves the emission of either α-radiation or β-radiation and/or γ-radiation.

(a) Explain what is meant by *spontaneous* decay.

.....

.....

..... [2]

(b) State the type of emission, one in each case, that

(i) is not affected by electric and magnetic fields,

..... [1]

(ii) produces the greatest density of ionisation in a medium,

..... [1]

(iii) does not directly result in a change in the proton number of the nucleus,

..... [1]

(iv) has a range of energies, rather than discrete values.

..... [1]

© UCLES 2009

BLANK PAGE

Permission to reproduce items where third-party owned material protected by copyright is included has been sought and cleared where possible. Every reasonable effort has been made by the publisher (UCLES) to trace copyright holders, but if any items requiring clearance have unwittingly been included, the publisher will be pleased to make amends at the earliest possible opportunity.

University of Cambridge International Examinations is part of the Cambridge Assessment Group. Cambridge Assessment is the brand name of University of Cambridge Local Examinations Syndicate (UCLES), which is itself a department of the University of Cambridge.